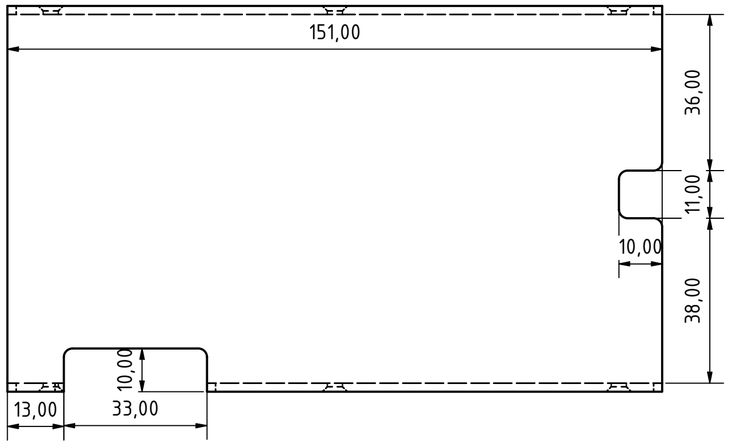

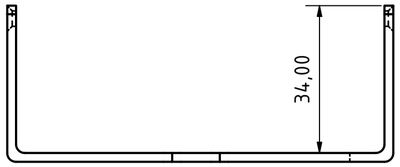

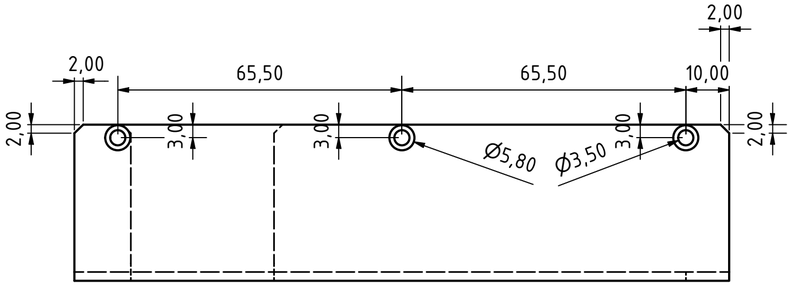

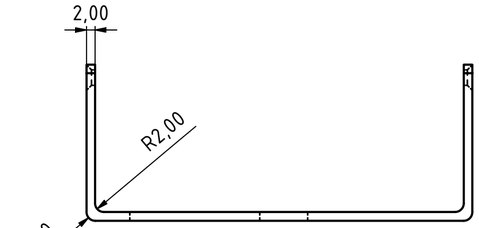

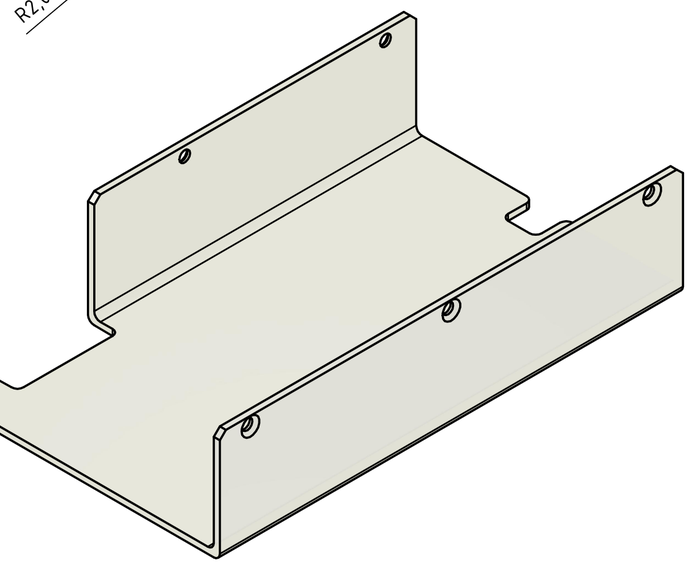

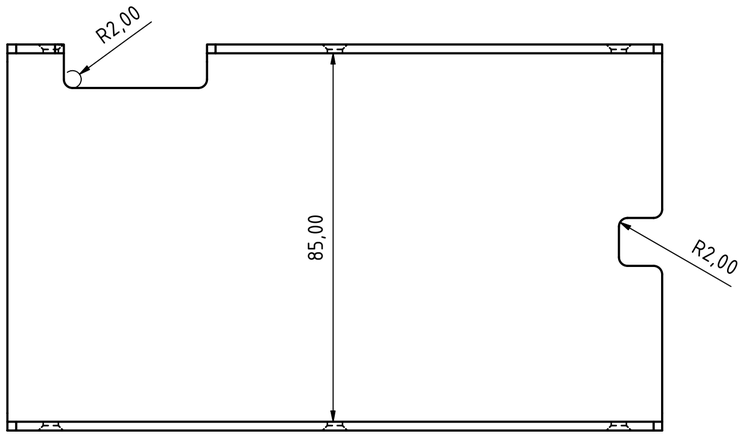

						Polycarbonate, Clear
					Date	Name
				Drawn	03.10.2023	Wernegger
				Checked		
				Standard		
						HO100002981 acrylic glass cover
State	Changes	Date	Name			

1
A2